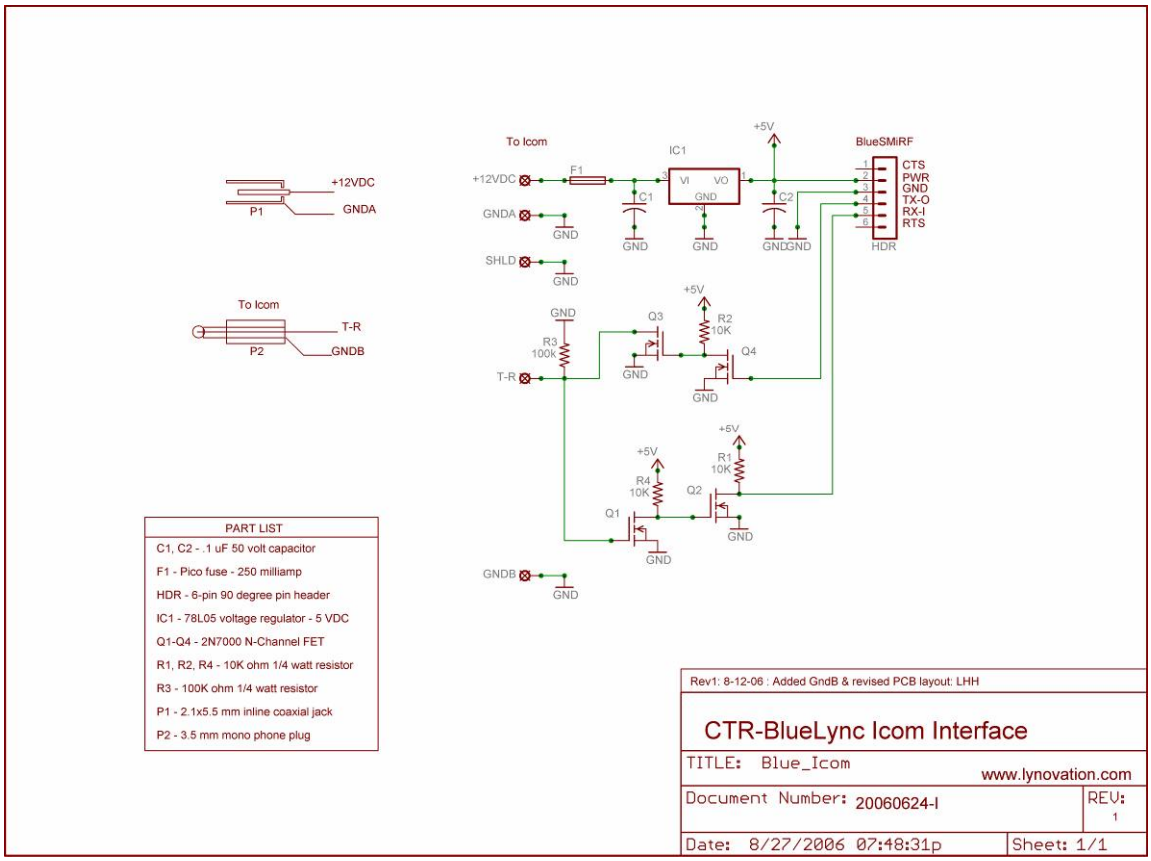
To Icom
+12VDC
GNDA
P1
To Icom
T-R
GNDB
P2
IC1
VI
VO
GND
F1
C1
C2
+5V
BlueSMiRF
CTS
PWR
GND
TX-O
RX-I
RTS
HDR
SHLD
Q1
Q2
Q3
Q4
R1 10K
R2 10K
R3 100k
R4 10K
PART LIST
C1, C2 - .1 uF 50 volt capacitor
F1 - Pico fuse - 250 milliamp
HDR - 6-pin 90 degree pin header
IC1 - 78L05 voltage regulator - 5 VDC
Q1-Q4 - 2N7000 N-Channel FET
R1, R2, R4 - 10K ohm 1/4 watt resistor
R3 - 100K ohm 1/4 watt resistor
P1 - 2.1x5.5 mm inline coaxial jack
P2 - 3.5 mm mono phone plug
Rev1: 8-12-06 : Added GndB & revised PCB layout: LHH
CTR-BlueLync Icom Interface
TITLE: Blue_Icom
www.lynovation.com
Document Number: 20060624-I
REV: 1
Date: 8/27/2006 07:48:31p
Sheet: 1/1

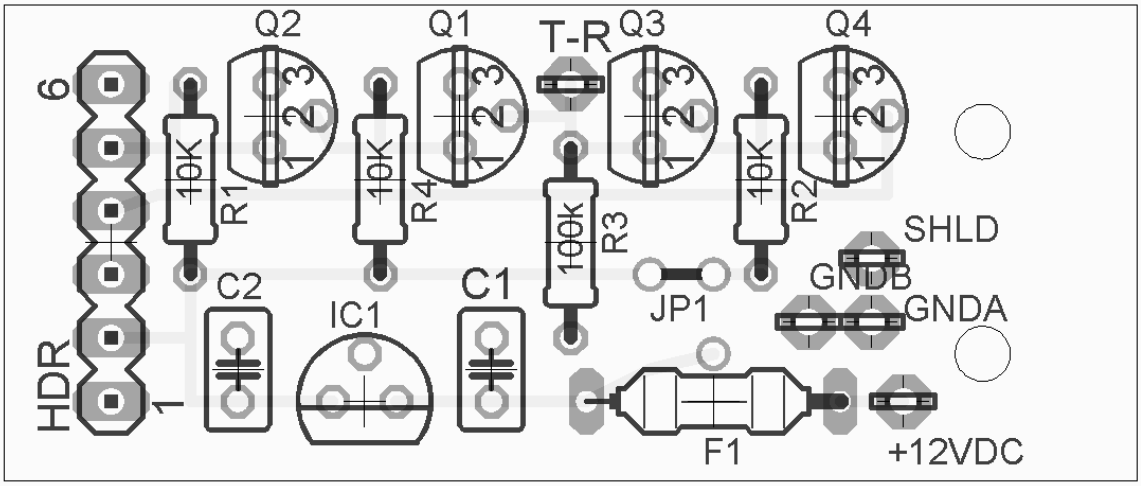
Q2
Q1
T-R
Q3
Q4
6
HDR
1
10K
R1
10K
R4
100K
R3
10K
R2
SHLD
GNDB
GNDA
C2
IC1
C1
JP1
F1
+12VDC