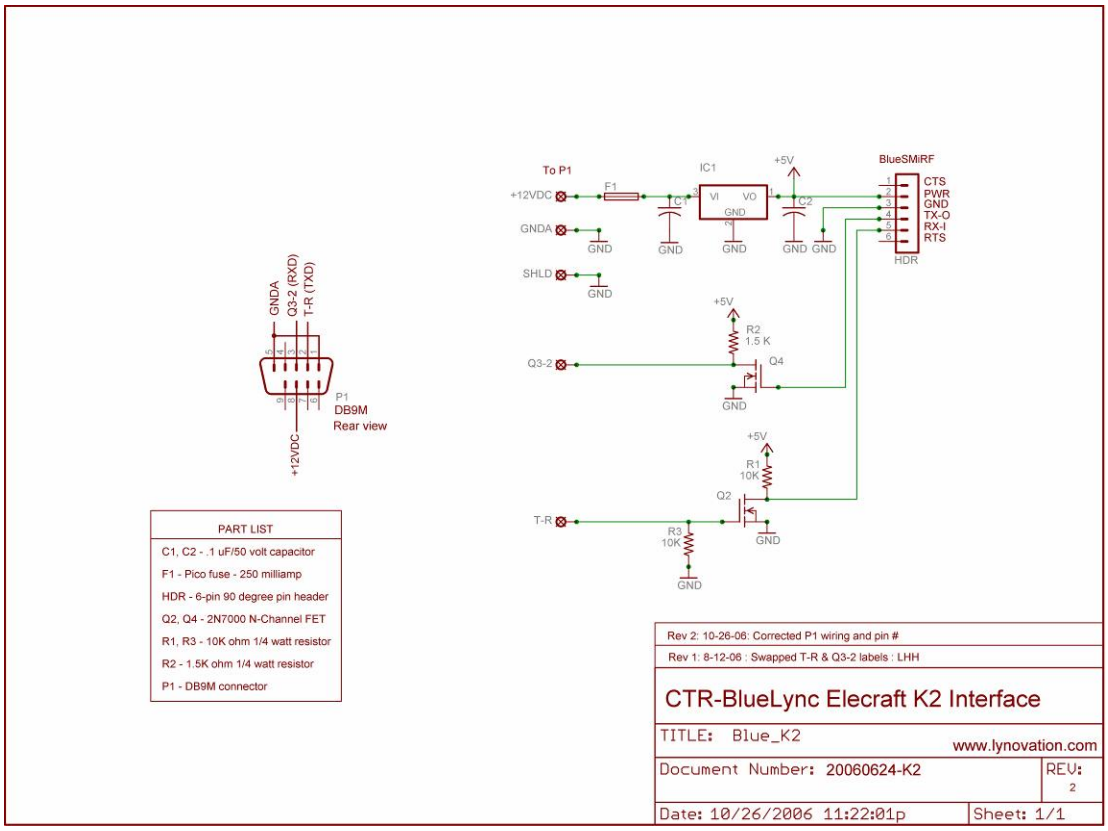
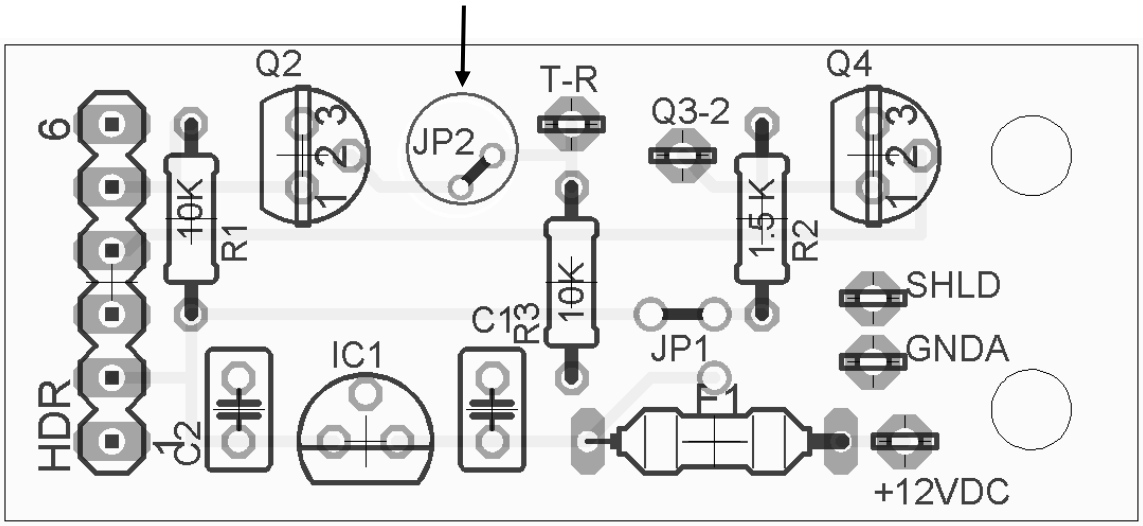
NOTE: Install JP2 as shown below