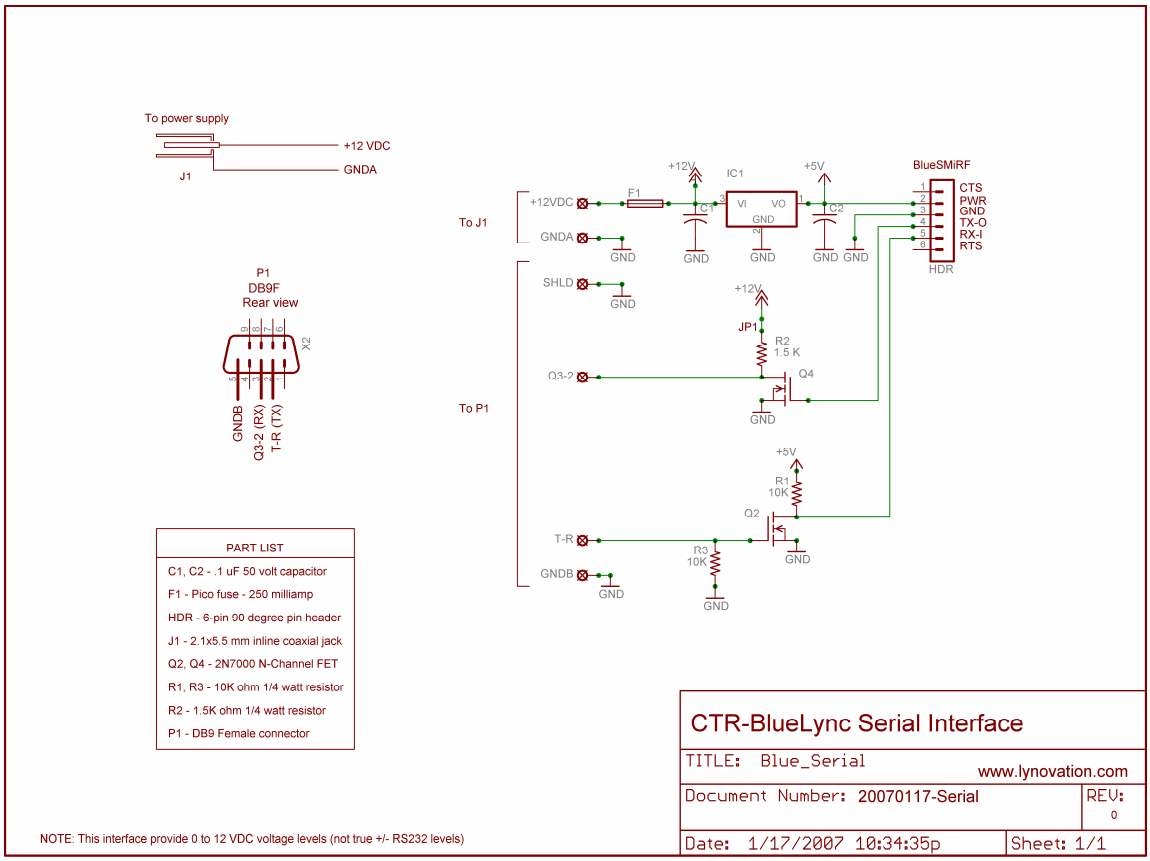
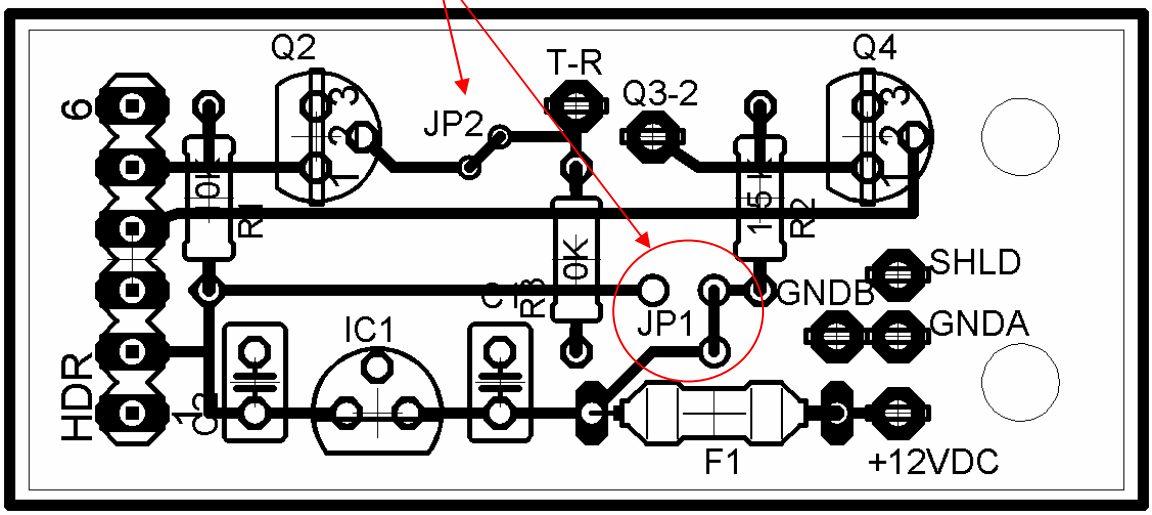
Note: Cut trace above JP1, add jumpers JP1 and JP2